OPERATING TORQUE IN BALL VALVES-A REVIEW

G. Gokilakrishnan[1], S. Divya[2], R. Rajesh[3], V. Selvakumar[4]
[2]ME Student, [1,2,3]Department of Mechanical Engineering
Sri Eshwar College of Engineering, Coimbatore, India
[4]Assistant Manger -Assembly Vitgo Valves, Coimbatore.

ABSTRACT: Ball valve is a one way valve with a spherical disc, which controls the flow through it. Torque is the main factor for operating ball valves. Most of the ball valves require high operating torque for its operation, some external devices are required to overcome this torque. Hence more research is necessary to reduce the operating torque; thereby one can reduce manual effort. This paper deals with basics, advantages and disadvantages of ball valve, torque and its importance in ball valves, torque measuring and applying instruments used for ball valves.
Keywords: Ball valve, torque.

I. INTRODUCTION

Valve is a pressure containing mechanical device that controls the flow of fluid and pressure within a system or otherwise modify the flow of fluid that passes through it. Some of the functions of valve are a) Stopping and starting fluid flow. b) Varying (throttling) the amount of fluid flow. c) Unidirectional flow. d) Controlling/Modulating the flow. Basic parts of valve all valves have the following basic parts: the body, bonnet, trim, packing and actuators. Torque is a rotating force used to produce the rotary motion (A force that tends to cause rotation). Torque is a measure of how much force acting on an object causes that object to rotate. Torque is calculated by multiplying force and distance. The SI unit of torque is Newton-meter. Valve torque is the energy needed to close or open the valve. Normally high valve torque happens during initial opening the valve once the valve start opening, the torque will reduce and again the valve torque tends to increase when reaches complete open position. When determining an actuator for the valve operation, it is important to size the actuator accurately with enough safety margins based on the design conditions. If actuator is too small it will not do the job correctly and if actuator is too big it will cause valve control problem.

II. LITERATURE SURVEY

Ming jyh chern et.al (2007) [1] proposed the method which provides an effective way to determine the performance coefficients of a valve using particle tracking flow visualization method (PTFV). The performance, flow patterns and cavitation phenomena of a ball valve were studied experimentally. By employing this technique the flow rate/pressure, the performance characteristics and the inside-valve flow patterns were studied in this paper.

Janusz rogula (2012) [2] presents the results of investigations of the ball valve tightness. The ball valves are used in places of pipelines where turn on/off of steam flow is required. The leakage affects the system efficiency. In this paper helium detector was used to determine the leakage volume in given time intervals.

Tudor et.al (2003) [3] proposed some new theoretical developments on erosion-corrosion wear model of carbide materials in crude petroleum flow. The wear model is based on plastically or elastically fatigues, when the corrosion fluid has solid particles. This has been addressed through the ball valve of crude petroleum extraction pump. It was concluded that theoretical erosive-corrosive wear model has been used to increase the durability of ball and seat valve.

Yogesh Gawas et.al (2010) [4] investigated the valve performance and its characteristics; the flow through the valve is studied using numerical technique. In this paper the numerical simulations were performed using FLUENT, to estimate the valve sizing coefficient and to study the flow patterns cavitation index, and torque coefficient.

Ming-Jyh Chern et.al (2004) [5] investigated the effect of V-ports on flows passing through the ball valve. It is tedious to control the flow rate linearly in a ball valve without external devices. This task is achieved by V-ports. Three V-ports with angles (30 deg, 60 deg, and 90 deg) were studied and it was concluded that 60 and 30 deg V-ports decrease the volume flow rate and increase the pressure loss.

Chih-ChengWANG et.al [6] proposed two different control devices to linearly control the volumetric flow rate in a full-port1/4 turn ball valve. These control devices were called R-ports and V-ports. Effects on fluid flows and flow performance coefficients in the ball valve were investigated using Computational technique and (PTFV) technique.

Thananchai Leephakpreeda (2005) [7] presents the flow characteristics of fluid flowing through the conventional and modified ball valves for feasibility of a “linear” ball valve. Theoretical and experimental studies are discussed for determining the flow rate of fluid by considering various parameters. It can be concluded that those factors cause the modulation of flow rate when the ball is turned at different opening degree. With modification of these factors, the flow characteristics of fluid may be adjusted to be linear for the ball valve.

S C Zhang et.al (2012) [8] provided the theoretical guidance for design and optimization of the new rotor oil-gas mixture pump export ball valve, which can better adapt to the oil and gas mixed condition. 3d model of ball valve flow field was established using the FLUENT software and adopting the simple algorithm to simulate the flow field.

M.S kalsi et.al [9] developed and implemented air operated valve programs (AOV) to ensure that high safety significant valves will function reliably under their design basis conditions. There are several types of quarter turn valves for

 Copyright 2014.All rights reserved.

which validated models are not available. Under electric power research institute's motor operated valve performance prediction program (EPRI MOV PPP) validated models were developed. These models eliminate the potential for unwarranted operability concerns ensuring reliable operation of AOVs.

Xue-Guan SONG et.al (2009) [10] proposed a model of CF8M stainless steel ball valve to enhance general corrosion resistance and to provide good strength by performing the optimization using OA, trade off method and RSM.

Leonid Grinis et.al (2013) [11] describes an theoretical model, experimental, and a numerical study of concentrated vortex flow past a ball in a hydraulic check valve. Vibration is caused by the rotation of the ball in the check valve. The model in ANSYS Fluent was used to predict the flow over a ball. This study demonstrates that it's possible to control vibration in a hydraulic system.

Li Zhang et.al (2012) [12] analyzed the pure water flow through the valve port, based on aqueous medium with low viscosity, poor lubrication. Internal flow field in visual simulation analysis has been done through the FLUENT software. The pressure, speed, temperature, turbulent kinetic energy cloud pictures have been obtained, the analytical results has been validated. Meanwhile it prepared for structure optimization of pilot valve.

H. Mahgerefteh et.al (1997) [13] proposed the method to study the dynamic response of ball valves and check valves. The study, performed in conjunction with the hypothetical rupture of a 145 km pipeline containing methane at 133 bar pressure, includes simulating the effects of valve proximity to the rupture plane and the delay in closure on the total amount of inventory released prior to pipeline isolation.

Nazih N. Bayomi et.al (2013) [14] introduced a new valve concept that consists of two parallel portions of globe type valves with different characteristics. This present work may be the first step for the new concept of valve type used for engineering systems.

Gil Avery, P.E (2005) [15] proposed the requirements necessary for valves to meet the high differential pressures prevalent in primary- only systems. The valve requirements for primary- only systems are more severe than those for primary-secondary systems because the pump head on primary-only systems often is 20% to 100% greater than the pump head of the secondary pump of a primary-secondary system.

Bhasin et.al (1998) [16] proposed the Composite ball valves which offers the potential for significant cost savings in maintanence due to erosion/corosion resistance. Composite technology application along with new valve designs has the potential to significantly reduce valve life-cycle costs. This paper deals with the implementation of composite ball valves in navy to reduce erosion/corosion.

Ana Pereira & Helena M. Ramos (2010) [17] studied how the flow behaves in key elements of small hydropower plants (SHP) which should be well designed in order to achieve properly the best hydraulic and energy efficiency. This paper shows the utility of the CFD numerical simulations as a tool for design and optimization of hydropower performance and flow behavior through hydro mechanical devices or hydraulic structures of intake and outlet types.

III. BALL VALVE

It is a one-way valve that is operated and closed by pressure on a ball which fits into a cup shaped opening. A ball valve is a rotational motion valve that uses a ball-shaped disk to start or stop flow of fluid. When the valve handle is rotated to open the valve, the ball turns to a point where the hole through the ball is in line with the valve body outlet and inlet. When the valve is shut, the ball is turned so that the hole is perpendicular to the flow openings of the valve body and the flow is stopped.

A. Components of ball valve:

- Body
- Seat
- Disc(ball)
- Handle(lever)
- Stem

B. Advantages of ball valve:

- A ball valve is the low cost product compared to any valve configuration.
- Ball valves have low maintenance costs.
- Ball valves are compact.
- Lubrication is not necessary, and ball valve give tight sealing with low torque.

C. Disadvantages of ball valves:

- Conventional ball valves have relatively least throttling characteristics.
- During throttling position, the partially exposed seat rapidly erodes because of the impingement of the high velocity flow.

IV. TYPES OF TORQUES EXHIBITED IN BALL VALVES

There are six types of torque exhibited in ball valves

A. Break to open (BTO)

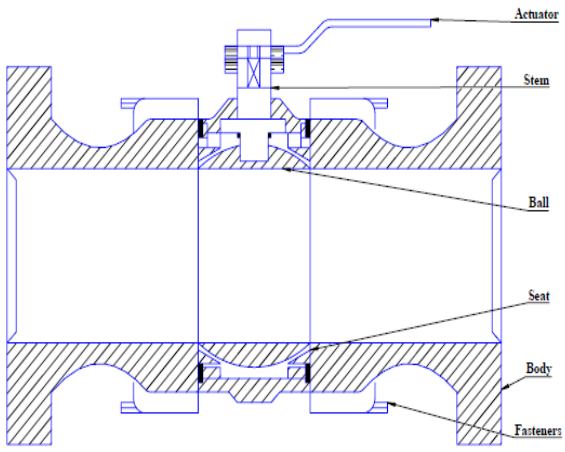

Figure 1: Ball valve

 Copyright 2014.All rights reserved.

B. Running torque (RT): The torque of the valve when ball opens at approximately 35° to 45° is known as running torque.
C. End to open (ETO): The torque of the valve when ball opens at 80° position (i.e. it is about to open) is known as end to open torque.
D. Break to close (BTC): When the valve is open, the torque required to break the open position of the ball to close the valve is known as break to close torque.
E. End to close (ETC): The torque of the valve when it is about to close, is known as end to close torque.
F. BTO with double block: The torque measured when the valve is closed and both the seats are under pressure is known as BTO with double block torque.

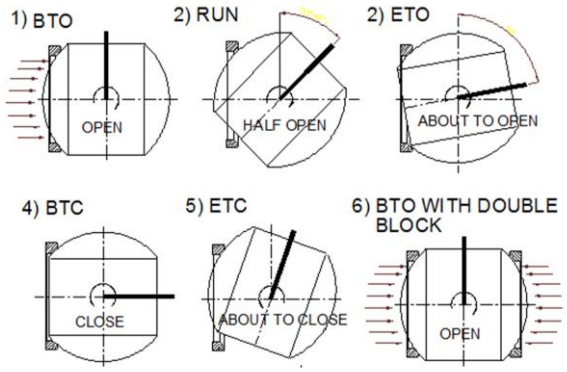

Figure 2: Position of ball in different torque conditions

V. FACTORS INFLUENCING OPERATING TORQUE OF BALL VALVES

- Design and material related factors.
- Application related factors.

Design and material related factors include the design of ball, body, stem, seat, handle and the materials used for producing these components. The torque may vary if the design and material does not meet the correct requirements. Application related factors include the frequency of operation, media and system pressure, The torque needed to operate a ball valve comes from following different areas:

- Stem.
- Ball/Seat.

A. Stem torque:
It is primarily dependent upon the tightness of the stem nut. Proper adjustment of the stem nut is important to valve life and performance. If the nut is very loose, the valve exhibits leakage; if the nut is very tight, the total torque requirement can be higher to the point where the actuator may not be powerful enough to cycle the valve. The stem torque should be constant for operating ball valves.

B. Ball/seat torque:
It is created by the friction between the ball and seat and is very sensitive to service conditions. The "floating ball" design concept allows the system pressure to force the ball into the down seat. The larger the system pressure, the ball is forced harder into the seat and, exhibitis, the larger the torque. Since various types of seat materials have different coefficients of friction, the ball/seat torque also becomes a function of the seat materials being used. Valve torque is also a function of the media flowing through the valves. Abrasive media have a tendency to increase the amount of friction between ball and seats, whereas some light oils, which provide extra lubricity, can decrease the amount of torque required. The torque required to operate a ball valve is maximum at the start of opening. This is because of change in the ball surface that is in contact with seats. Ball surface, contacts with the seats are maximum when the valve is closed.

C. Causes:
The purpose of Ishikawa diagram is to break down the root causes that potentially contribute to a particular effect. Ishikawa diagram was first described by Kauro ishikawa (1968). Causes are usually grouped into six major categories- Fig3 shows 6m's which are used in manufacturing industry. Using Ishikawa diagram reason for high torque were found and given below.

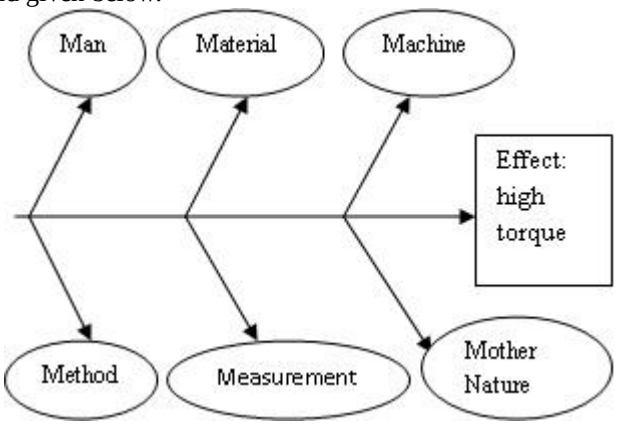

Figure 3: Cause and Effect diagram

Man:

- Inadequate training in assembly methods.
- Wrong selection of tightening torque for fasteners.
- Wrong selection of testing pressure.
- Improper handling of torque measuring instruments.

Material:

- High density of gaskets.
- Seat material hardness.
- Seat material density.
- Seat material composition.

Method:

- Sequence of torque test
- Wrong way of manufacturing.
- Continues vibration during manufacturing

Machine:

- Torque wrench springs out of working.
- Over clamping of test rings.
- Improper maintenance of machines.
- Improper break downs.

Measurements:

- Seat thickness O/S, BOH (Ball over height) O/S,

 Copyright 2014.All rights reserved.

inner dimensions and outer dimensions of seat are out of specifications.

- Body seat bore depth U/S, stem bore, seat pocket inner diameter U/S is perpendicular.
- Adapter depth U/S, seat pocket U/S.
- Ball outer diameter O/S. spherocity above 0.02 mm (max).
- Stem outer diameter O/S. (O/S= over size, U/S=under size BOH=ball over height)

VI. TORQUE APPLYING INSTRUMENT

Tightening torque wrench used to apply a set torque to a fastener. It produces the click like sound to the operator when the set torque is reached. Fasteners are provided in the ball valve to keep all the parts intact. Manual tightening without any torque control is a safety risk. There is a specific tightness which should be provided to the fasteners but when it exceeds, the torque will be increased. Hence it is necessary to check the tightness of the fasteners. If correct tightness is not provided to the fasteners the torque may exceed. This is achieved with the help of an instrument named tightening torque wrench. Tightening torque wrench uses the standard torque values as per the size of ball valves. The tightening torque wrench is set to the standard torque value for the particular ball valve. Then it is kept on the fasteners and tightening action is provided till a click sound is produced. If tightening action exceeds after the click sound, the torque will also increase. Hence it is clear that tightening torque wrench plays a vital role in the operating torque of ball valves.

Figure 4: Tightening torque wrench

VII. TORQUE MEASURING INSTRUMENT:

Dial torque wrench: it is an instrument used to check the operating torque. The operating principle is based on the working principle of dial gauge. The torque wrench is fitted with dial gauge The dial is set to zero at initial position then it is kept on the handle of the ball valve. The standard fluid pressure is passed through the pipe line and the torque is checked by rotating the wrench in the direction so as to open the ball valve. As it is rotated dial will indicate a torque value if this torque value is larger than standard torque the operating torque is higher. But if it is below the limit, the operating torque is safe.

Figure 5: Dial torque wrench

VIII. CONCLUSION

The basics of operating torque and ball valves were presented in this paper. Each ball valve requires minimum torque for its operation. If ball valve needs more torque than required minimum torque, during its operation, manual handling will be very tough. To reduce the manual effort and eliminate the use of external device more research work is needed.

REFERENCES

[1] Ming-Jyh Chern, Chin-Cheng Wang, Chen-Hsuan Ma., Performance test and flow visualization of ball valve, Journal of experimental thermal and fluid science 31(2007)505-512.

[2] Janusz Rogula.a, The influence of seat fatigue test on the leakage in ball valve, Journal of procedia engineering 39(2012)91-97.

[3] A.Tudor, R.Nehriu, I.Radu, V.Dumitru, A Wear study case of ceramic ball seat valve, Tribology in industry, Volume 25, no 3&4, (2003) 83-88.

[4] Yogesh Gawas, Dr.Vilas R.kalamkar, Vijay Mali, Modeling and Simulation of valve coefficients and cavitation characteristics in a ball valve, Proceedings of the International Conference on Fluid mechanics and Fluid power December 16-18, 2010.

[5] Ming-Jyh Chern, Chih-Cheng Wang, Control of volumetric flow-rate of ball valve using V-port, journal of fluids engineering may Vol-126(2004),471-481.

[6] Ming-Jyh Chern, Chih-Cheng Wang, Effects of control devices on flows in ball valve, Transactions of the Aeronautical and Astronautical society of the republic of china.

[7] Thananchai Leephakpreeda, Design factors for “linear” ball valve: theoretical and experimental studies, songklanakarin in J. sci. technol., 27, (2005),353-361.

 Copyright 2014.All rights reserved.

[8] S C Zhang, Y L Zhang, Z M Fang, numerical simulation and analysis of ball valve three dimensional flow based on CFD, IOP Conf.series: Earth and Environmental science 15 (2012) 052024.
[9] M.S Kalsi, B.Eldiwany, V.Sharma,D.Somogyi, dynamic torque models for quarter-turn air-operated valves, NRC/ASME symposium on valve and pumnp testing NUREG/CP-0152,Vol.3,3A-48 to 3A-59.
[10] Xue-Guan SONG, Seung-Gyu KIM, Seok-Heum BAEK, Young-Chul PARK, Structural optimization for ball valve made of CF8M stainless steel Transactions of non ferrous metals society of China 19(2009) s258-s261.
[11] Leonid Grinis, Vitaly Haslavsky, Turbulence Modeling Applied to Flow over a Hydraulic Ball Check Valve, Engineering, 5,(2013) ,685-691.
[12] Li Zhang, Jing Luo, Rui-Bo Yuan, Min He, The CFD Analysis of Twin Flapper -nozzle Valve in Pure Water Hydraulic, Journal of Procedia Engineering 31 (2012) 220 – 227.
[13] H. Mahgerefteh , P. Saha and I. G. Economou, A Study of the dynamic response of emergency shutdown valves following full bore rupture of gas pipelines, Trans IChemE, Vol 75, Part B, November 1997.
[14] Nazih N. Bayomi,Rafea M. Abdel-Maksoud, Mohamed A. Nawar,and Hasim A. Heikal,Valve with Inherent Characteristics, ISESCO JOURNAL of Science and Technology, volume 9-number 15-may2013(39-48)
[15] By Gil Avery, P.E, Selecting valves for variable flow hydronic systems, Journal of American Society of Heating Refrigerating and Air-Conditioning Engineers (Vol. 47, No. 9, September 2005).
[16] V.Bhasin, D.Conroy,and J.Reid, Development of a family of commercial marine composite ball valves,journal of naval engineers (july 1998) 51-65.
[17] Ana Pereira & Helena M. Ramos, CFD for hydrodynamic efficiency and design optimization of key elements of SHP, International journal of Energy and environment Volume 1, Issue 6, 2010 pp.937-952.
[18] Washington, D.C, DOE Fundamentals handbook mechanical science -1018/2-93 January 1993

 Copyright 2014.All rights reserved.